WHAT:

- **cross-dispersed echelle spectrograph + polarimeter + calibration unit + fibres**

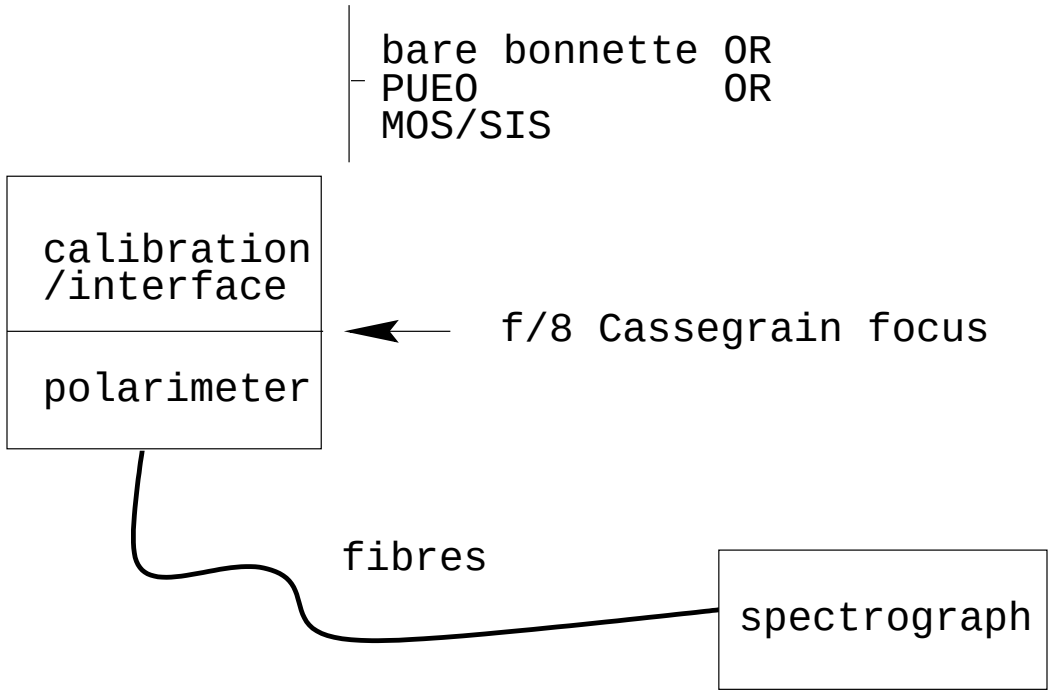

- **bright time instrument**
- **complete optical spectrum in 1 exposure 370nm < λ < 1000nm**
- **R ~ 50 000**
- **I, Q, U, V -> intensity, linear and circular polarization**
- **20% peak total throughput**
- **minimal CFHT staff support needed**
- **software provided to do real-time spectrum processing and preliminary analysis**